INTU FR COLLAR L

Intumescent pipe collar roll

TDS Technical Data Sheet

.INTUSEAL
passive fire protection manufacturer

PRODUT DESCRIPTION

Firestop collar **INTU FR COLLAR L** is composed of:

1) a flexible insert **(INTU FR WRAP L)** made of graphite-based material that swells under the influence of temperature above 140°C
and
2) an external casing made of 0.5 mm stainless steel sheet delivered in 2.5 m sections. The steel collar casing is equipped with mounting brackets for attaching the collar to the partition. The universal size enables installation of the collar on various pipe diameters.

APPLICATION

INTU FR COLLAR L is used for fire protection of penetrations with non-flammable pipes in flammable synthetic rubber insulation and flammable pipes running through fire partitions

Rigid walls:
The wall must be at least 150mm thick and have concrete, cellular concrete structure or masonry structure, with a minimum density of 600kg/m³

Rigid floors:
The floor must be at least 150mm thick and have concrete, cellular concrete structure or masonry structure, with a minimum density of 1700kg/m³

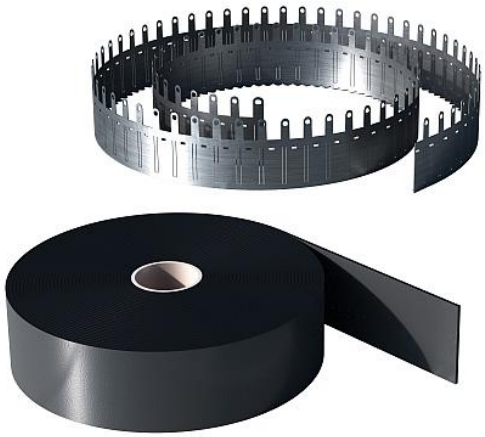

AVAILABILTY, DIMENSIONS

Type	Art. No.	Length
INTU FR COLLAR L	INCOL2500	2,5m

COMPLIANCE:

- Reference standard:
  EN 1366-3 / ETAG 026-2 / EAD 350454-00-1104
- DoP 3/2019
- ETA under development
- CoC under development
- TDS
- SDS
- Fire classification 03777/18/Z00NZP

TRANSPORT AND STORAGE

INTU FR COLLAR L has no negative impact on the environment. In the case of long-term storage, it is recommended to keep it in enclosed spaces. The storage period does not affect the product's properties.

INTUSEAL Sp. z o.o.
Ul. Kineskopowa 1, 05-500 Piaseczno, Poland
E-mail: sales@intuseal.com

VIES: PL5223031827

INSTALLATION METHOD

1. Fill the gaps with intumescent acrylic mastic INTU FR MASTIC.

2. Wrap the pipe with **INTU FR WRAP L** ensuring an appropriate number of wraps.

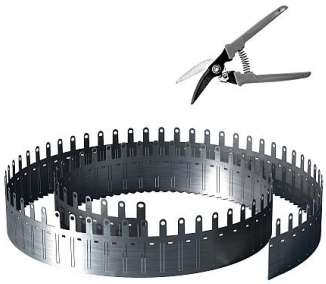

3. Cut the appropriate length of the steel casing.

4. Put the collar on the intumescent tape already placed on the pipe.

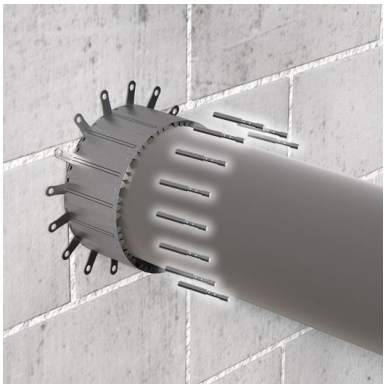

5. Attach the collar to the partition using steel screws.

SOLUTION DETAILS

PROTECTION IN WALLS

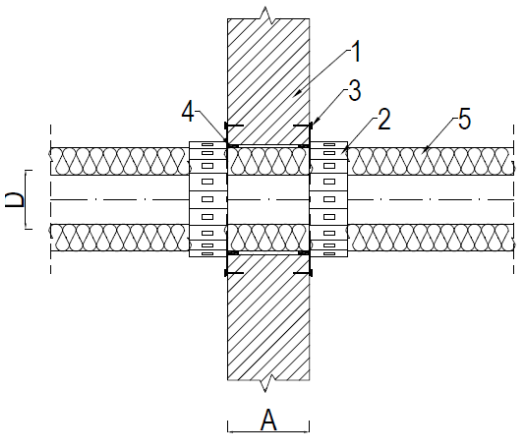

Fig. 1. Wall penetration

D – pipe diameter
A – wall thickness

1 – rigid wall (A ≥ 150 mm)
2 – **INTU FR COLLAR L**, installed on both sides of the wall
3 – steel screw
4 – a gap around the collar, on both sides of the partition, filled with intumescent acrylic mastic
5 – non-flammable pipe insulated with synthetic rubber

* - numer of wraps according to TDS **INTU FR WRAP L**

➔ SOLUTION DETAILS (continuation)

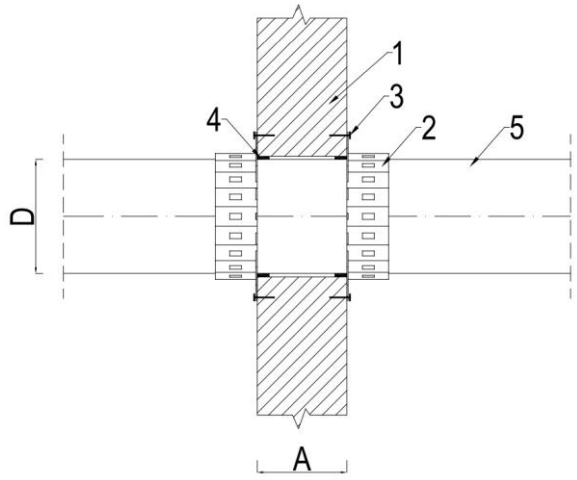

Fig. 3. Wall penetration

D – pipe diameter
A – wall thickness

1 – rigid wall (A ≥ 150 mm)
2 – **INTU FR COLLAR L**, installed on both sides of the wall
3 – steel screw
4 – a gap around the collar, on both sides of the partition, filled with intumescent acrylic mastic
5 – flammable pipe

* - numer of wraps according to TDS **INTU FR COLLAR**

PROTECTION IN FLOORS

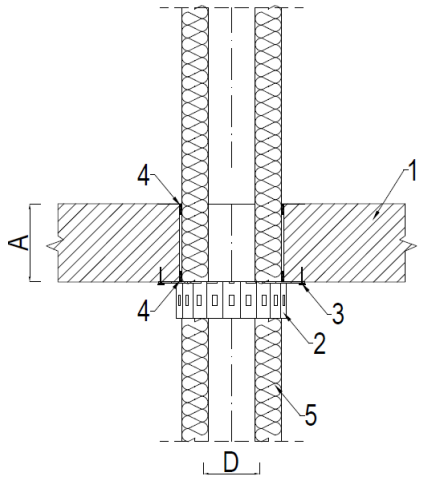

Fig. 2. Floor penetration

D – pipe diameter
A – wall thickness

1 – floor (A ≥ 150 mm)
2 – **INTU FR COLLAR L**, installed from the bottom of the floor
3 – steel screw
4 – a gap around the collar, on both sides of the partition, filled with intumescent acrylic mastic
5 – non-flammable pipe insulated with synthetic rubber

* - numer of wraps according to TDS **INTU FR WRAP L**

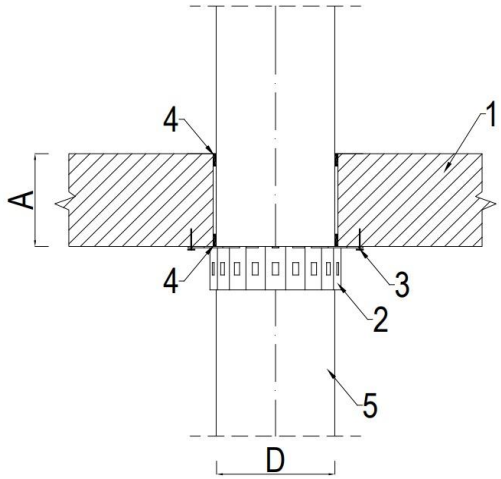

Fig. 4. Floor penetration

D – pipe diameter
A – wall thickness

1 – floor (A ≥ 150 mm)
2 – **INTU FR COLLAR L**, installed from the bottom of the floor
3 – steel screw
4 – a gap around the collar, on both sides of the partition, filled intumescent acrylic mastic
5 – flammable pipe

* - numer of wraps according to TDS **INTU FR COLLAR**

FIRE RESISTANCE CLASSIFICATION

COLLAR	DN	Insulation thickness	Wall	Floor
STEEL + SYNTHETIC RUBBER	42,4mm	9mm	EI240	EI240
		50mm	EI120	EI120
	88,9mm	9mm	EI90	EI120
		23mm	EI120	EI90
		50mm	EI90	EI120
	159,0mm	9mm	-	EI120
		50mm	-	EI90
COPPER + SYNTHETIC RUBBER	15,0mm	9mm	EI240	EI120
		50mm	EI240	EI90
	54,0mm	9mm	EI60	EI120
		50mm	-	EI90

INTUSEAL Sp. z o.o.
Ul. Kineskopowa 1, 05-500 Piaseczno, Poland
E-mail: sales@intuseal.com

VIES: PL5223031827